PawHut

IN231000017V01_GL

D51-402V00_D51-402V01

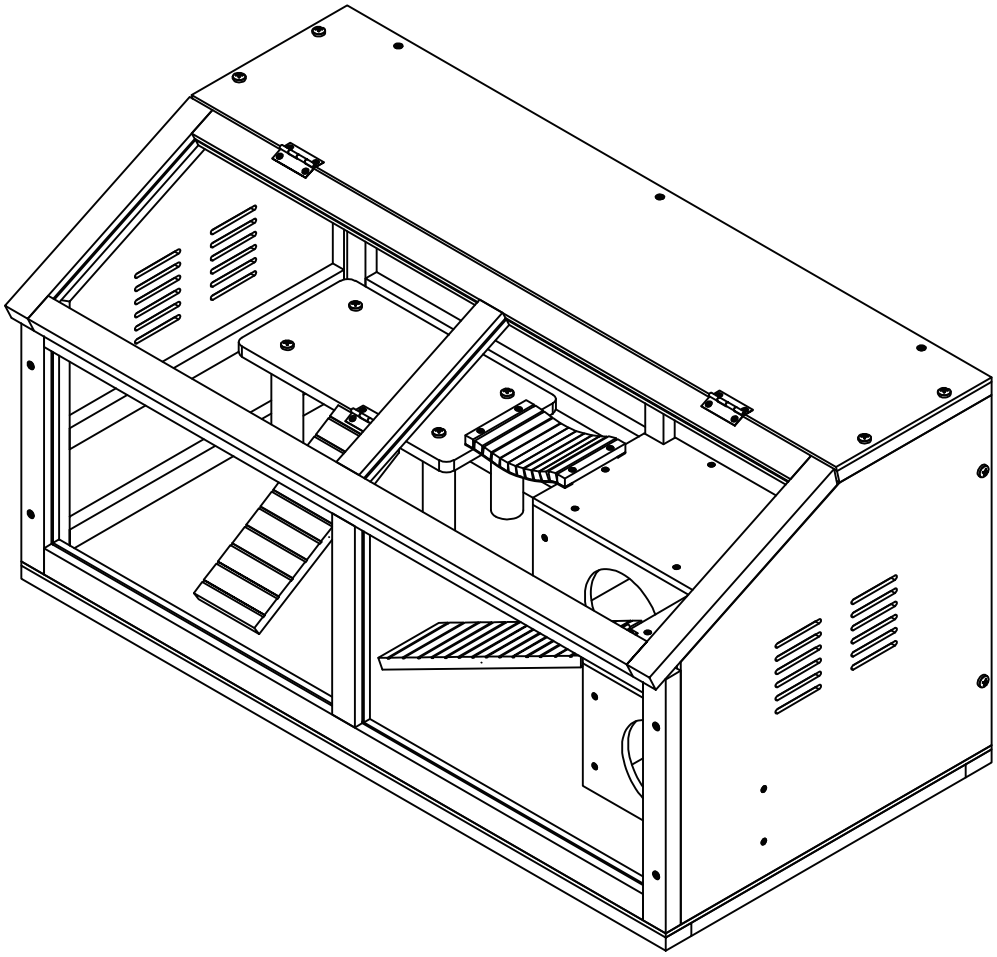

13
STEPS

1.5 HR

***EN*_IMPORTANT, RETAIN FOR FUTURE REFERENCE: READ CAREFULLY.**

***FR*_IMPORTANT:A LIRE ATTENTIVEMENT ET À CONSERVER POUR CONSULTATION ULTÉRIEURE.**

***ES*_IMPORTANTE, LEA Y GUARDE PARA FUTURAS REFERENCIAS.**

***PT*_IMPORTANTE, RETER PARA REFERÊNCIA FUTURA: LEIA ATENTAMENTE.**

***DE*_WICHTIG! SORGFÄLTIG LESEN UND FÜR SPÄTER NACHSCHLAGEN AUFBEWAHREN.**

***IT* _ IMPORTANTE! CONSERVARE IL PRESENTE MANUALE PER FUTURO RIFERIMENTO E LEGGERLO ATTENTAMENTE.**

A x 1

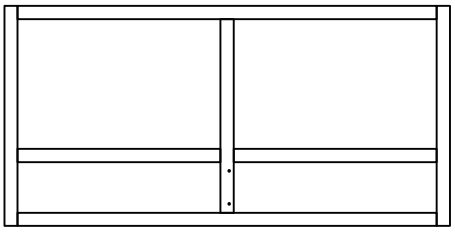

B x 1

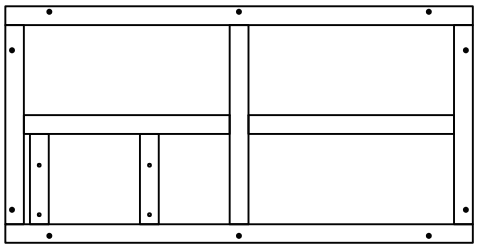

C x 1

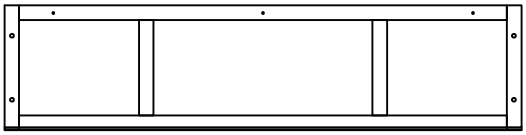

D x 1

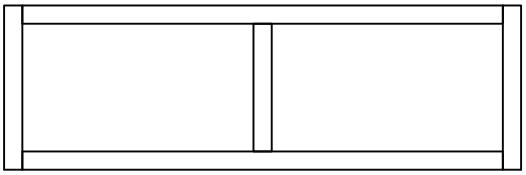

E x 1

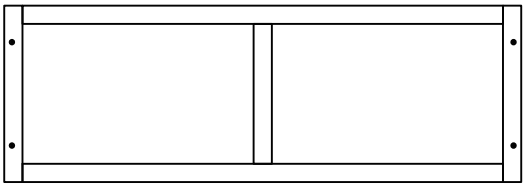

F x 1

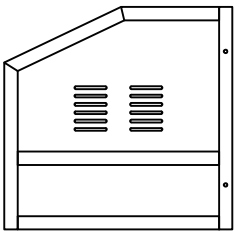

G x 1

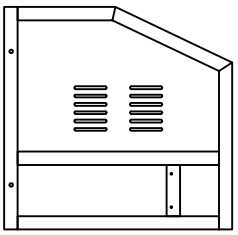

H x 1



I x 4

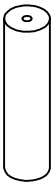

J x 2

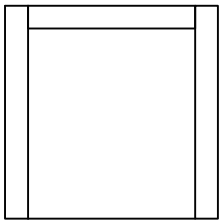

K x 1

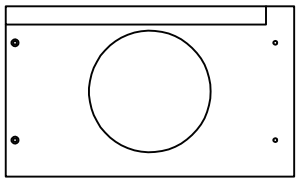

L x 1

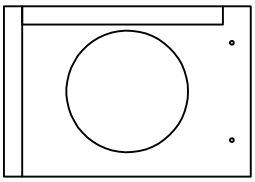

M x 1

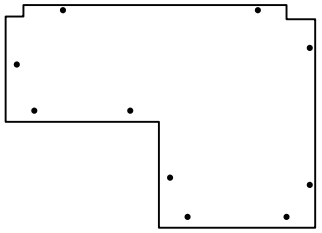

N x 1

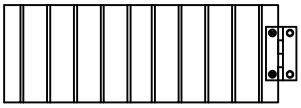

O x 1

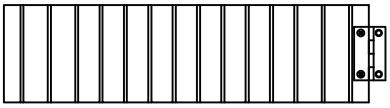

P x 1

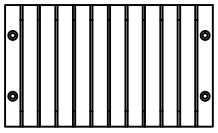

HARDWARE

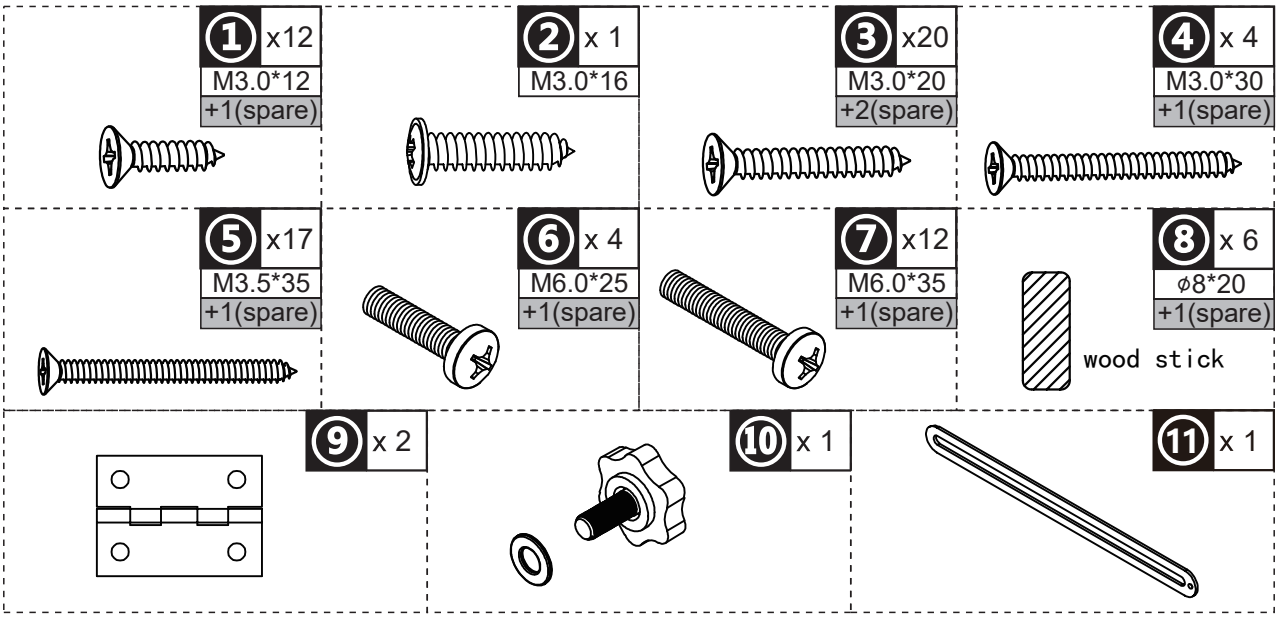
① x12
M3.0*12
+1(spare)
② x 1
M3.0*16
③ x20
M3.0*20
+2(spare)
④ x 4
M3.0*30
+1(spare)
⑤ x17
M3.5*35
+1(spare)
⑥ x 4
M6.0*25
+1(spare)
⑦ x12
M6.0*35
+1(spare)
⑧ x 6
ø8*20
+1(spare)
wood stick
⑨ x 2
⑩ x 1
⑪ x 1

01

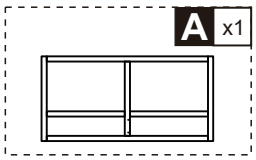
A x1

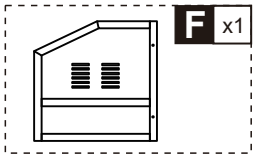
F x1

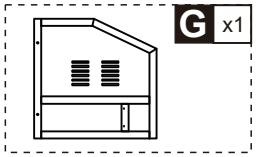
G x1

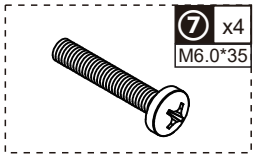
⑦ x4
M6.0*35

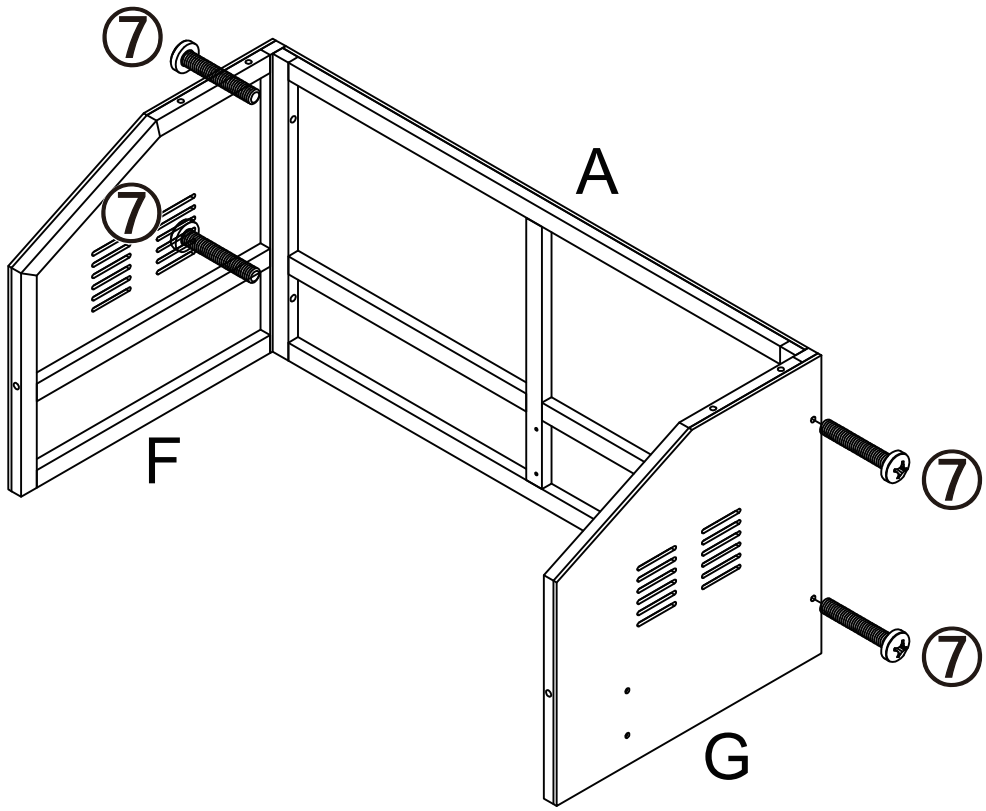
⑦
⑦
A
F
⑦
⑦
G

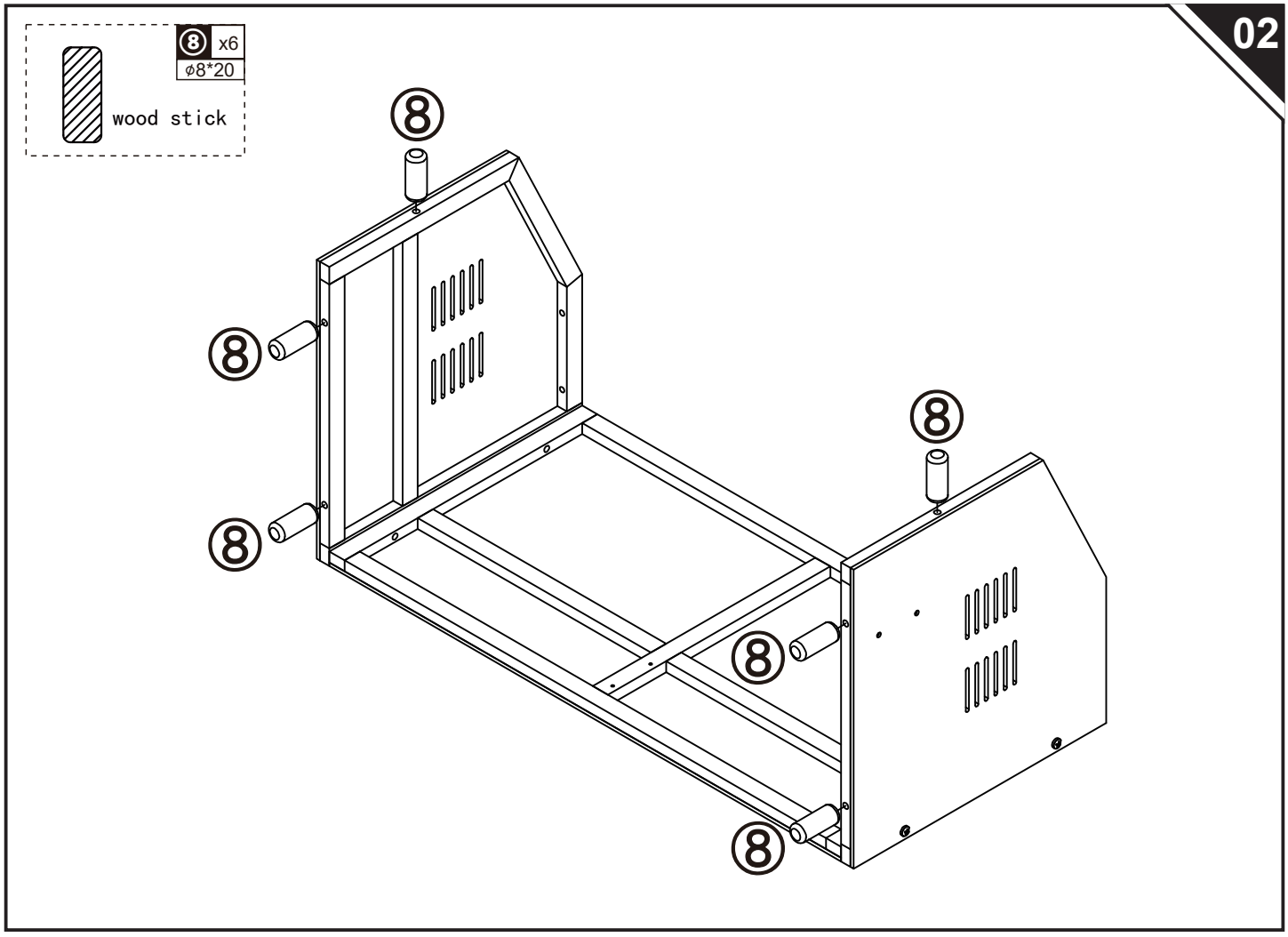
02
8 x6
ϕ8*20
wood stick
8
8
8
8
8
8

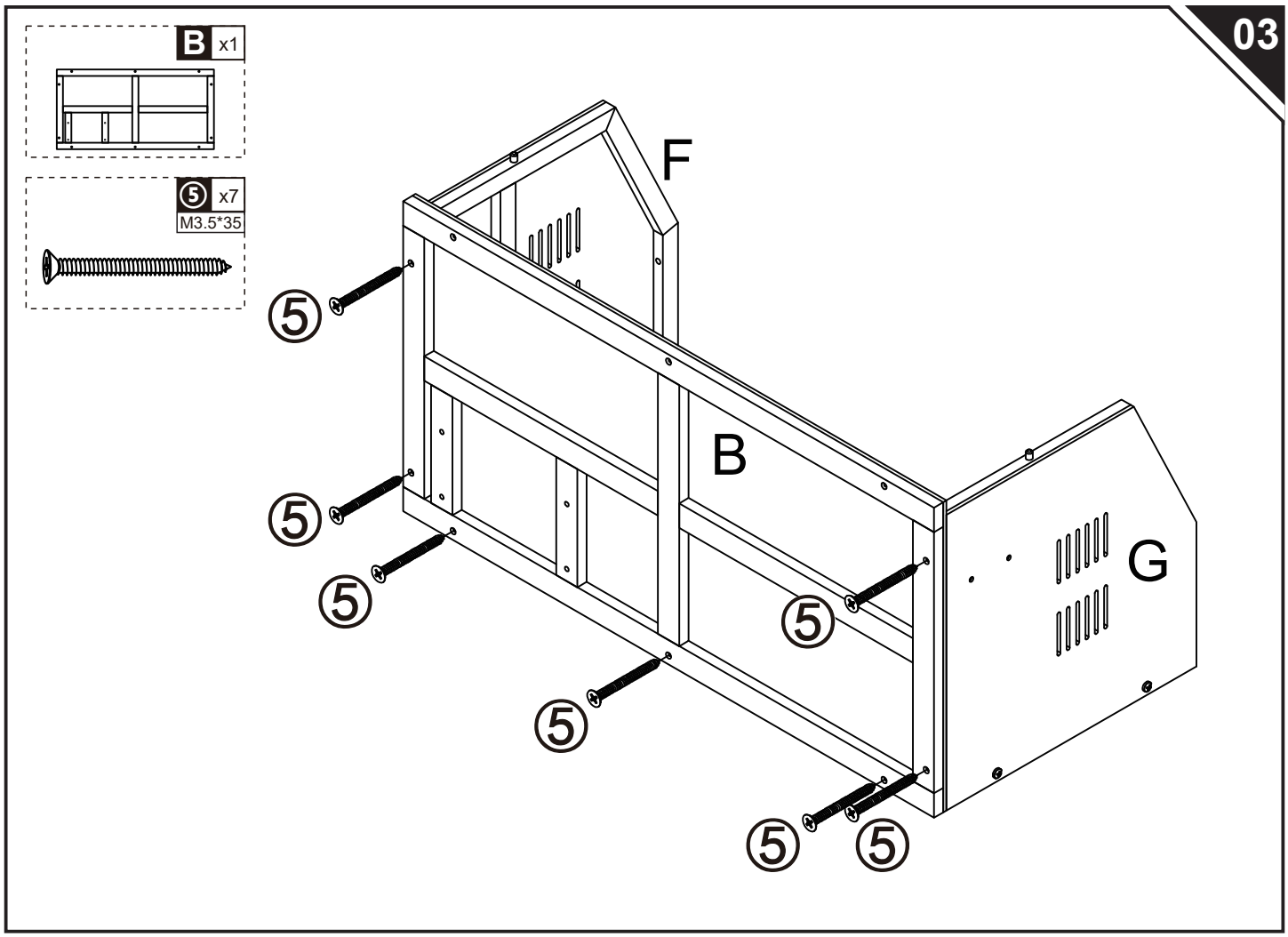
03
B x1
5 x7
M3.5*35
F
B
G
5
5
5
5
5
5
5

04

H x1

I x4

⑥ x4
M6.0*25

⑦ x4
M6.0*35

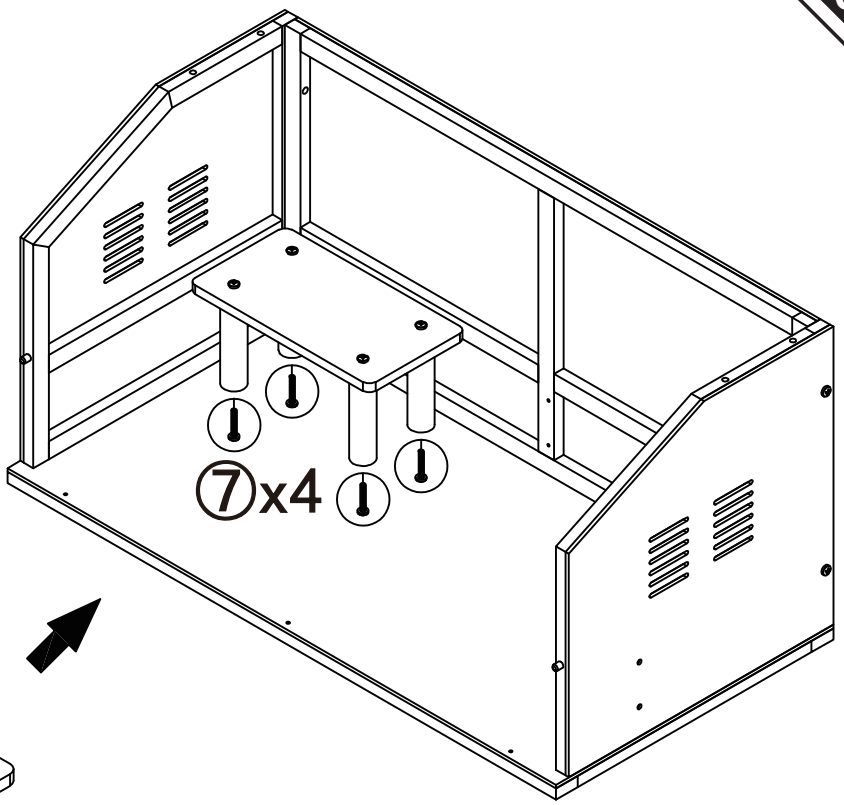

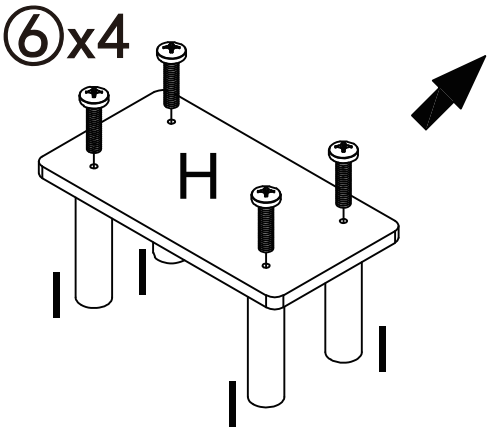

05

J x2

K x1

L x1

③ x6
M3.0*20

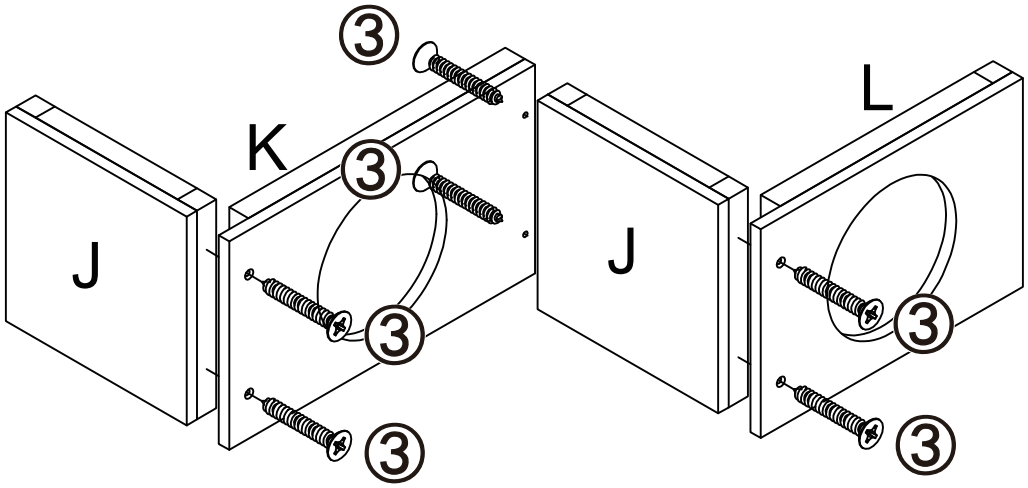

06

④ x4
M3.0*30

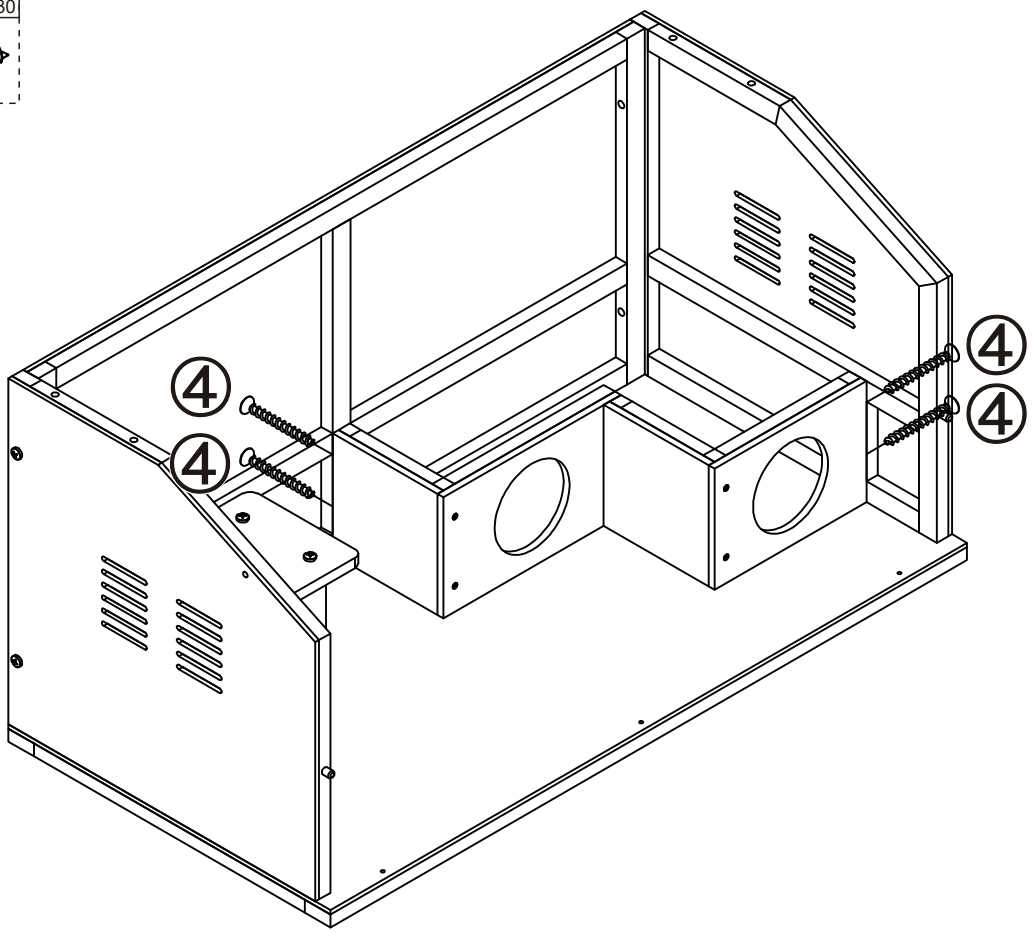

07

M x1

③ x10
M3.0*20

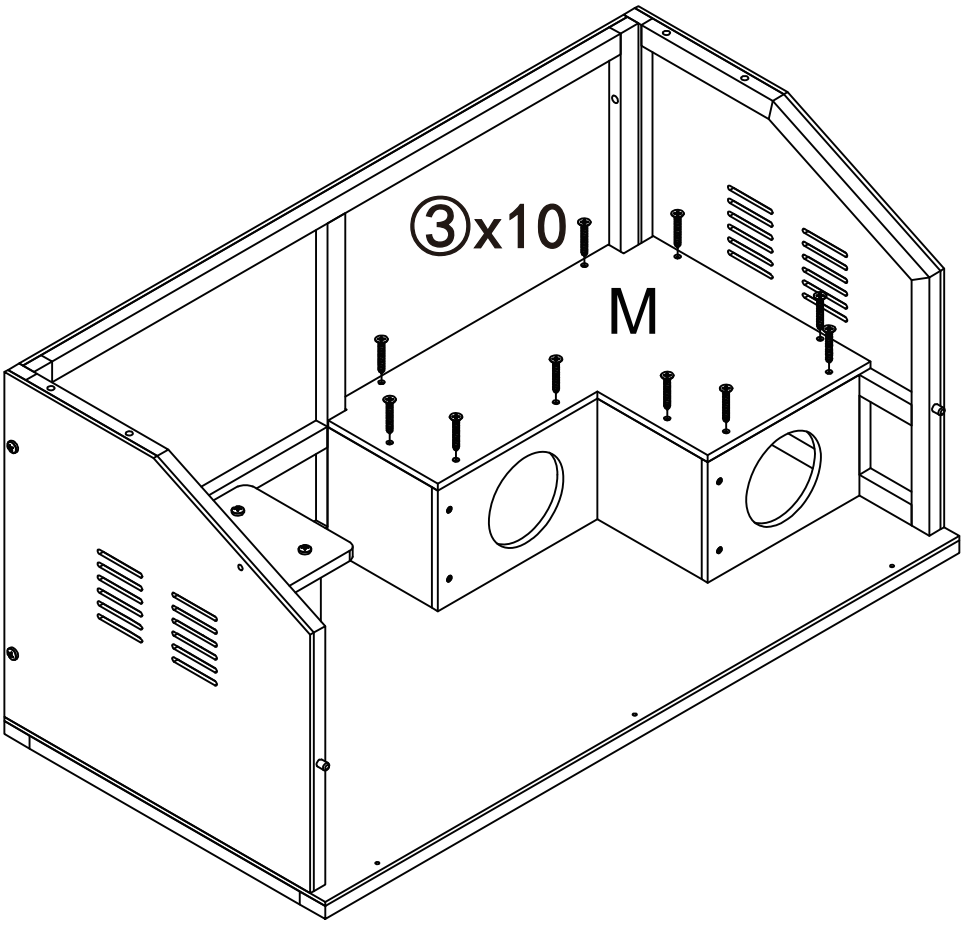

08

P x1

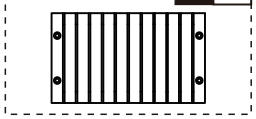

③ x4
M3.0*20



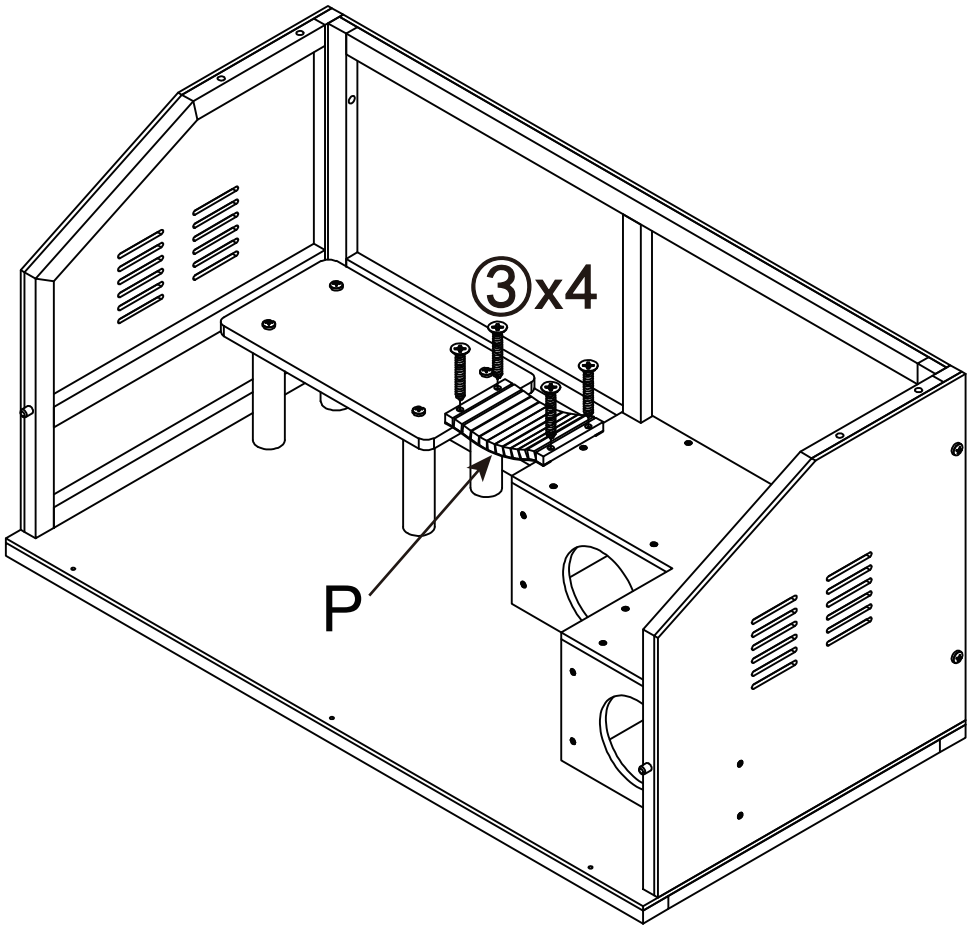

09

N x1

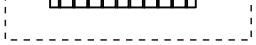

O x1



① x4
M3.0*12



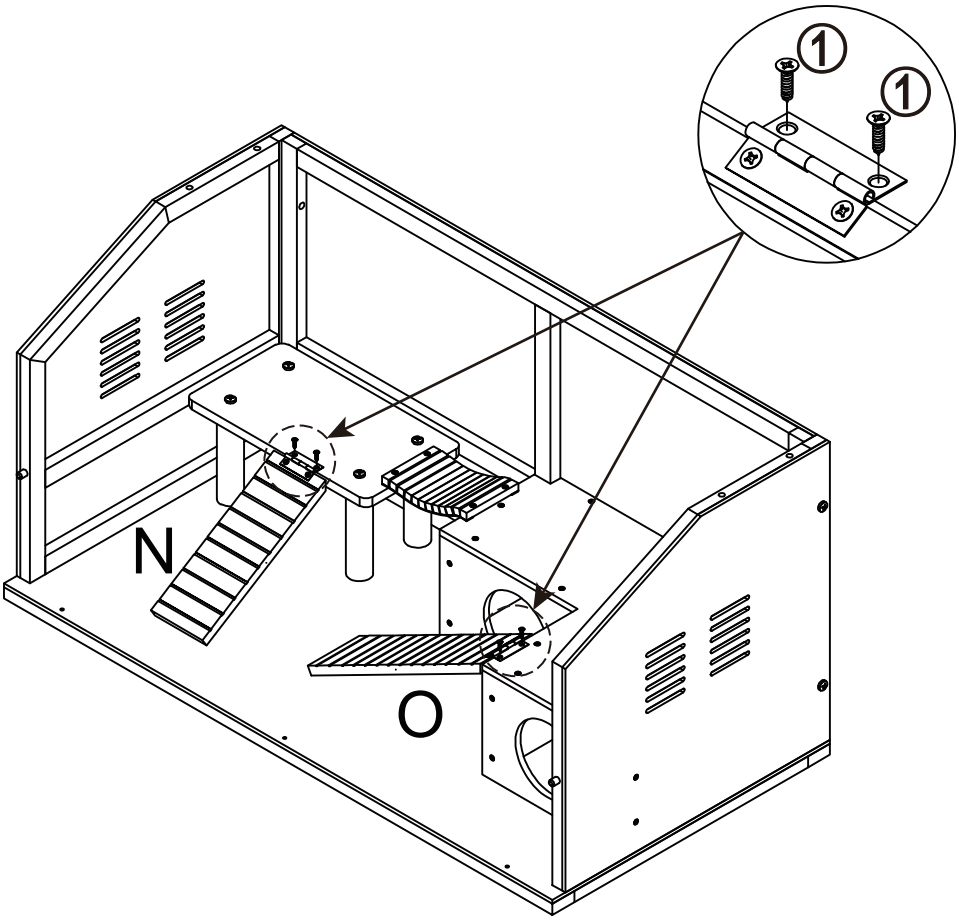

10

E x1

⑤ x7
M3.5*35

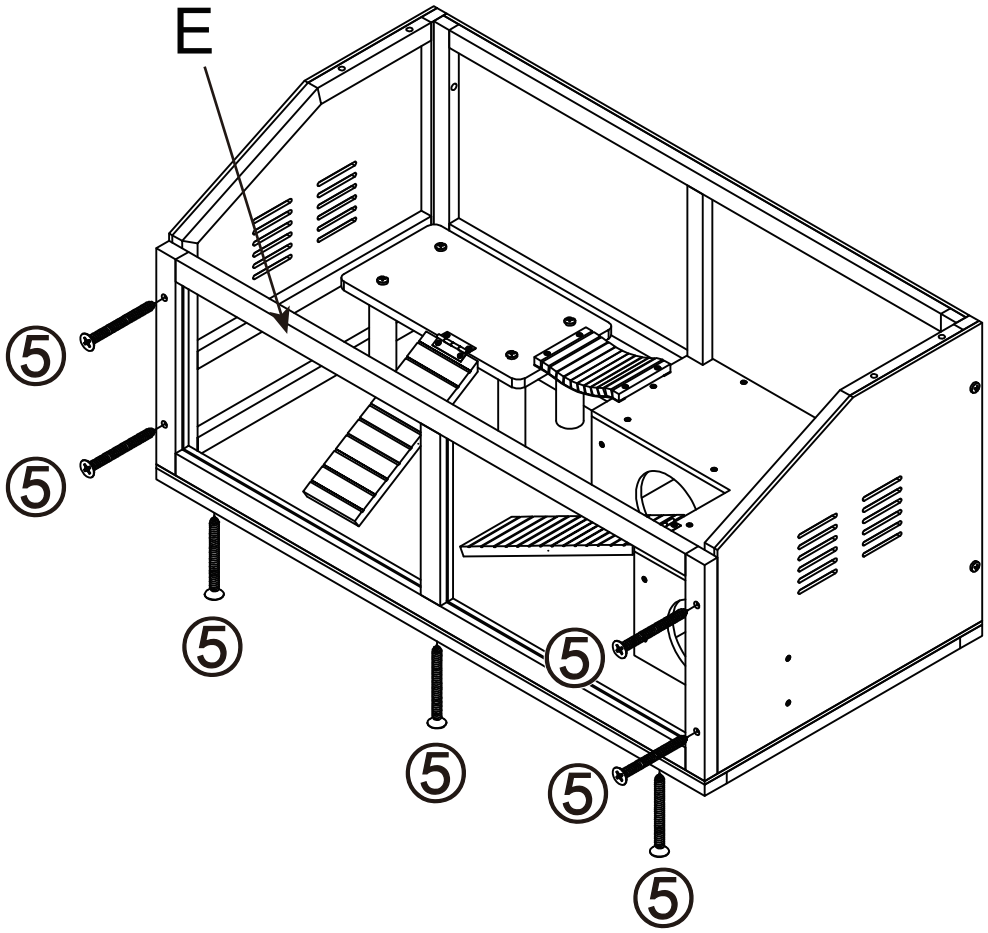

11

C x1

⑤ x3
M3.5*35

⑦ x4
M6.0*35

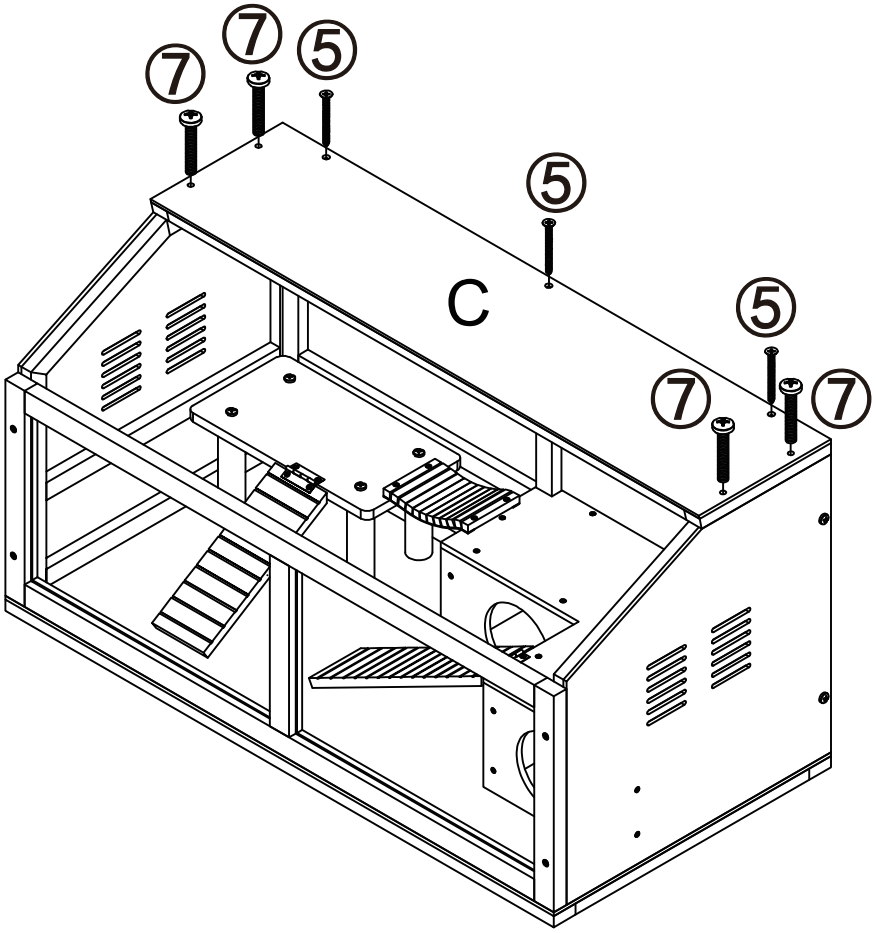

12

D x1

① x8
M3.0*12

⑨ x2

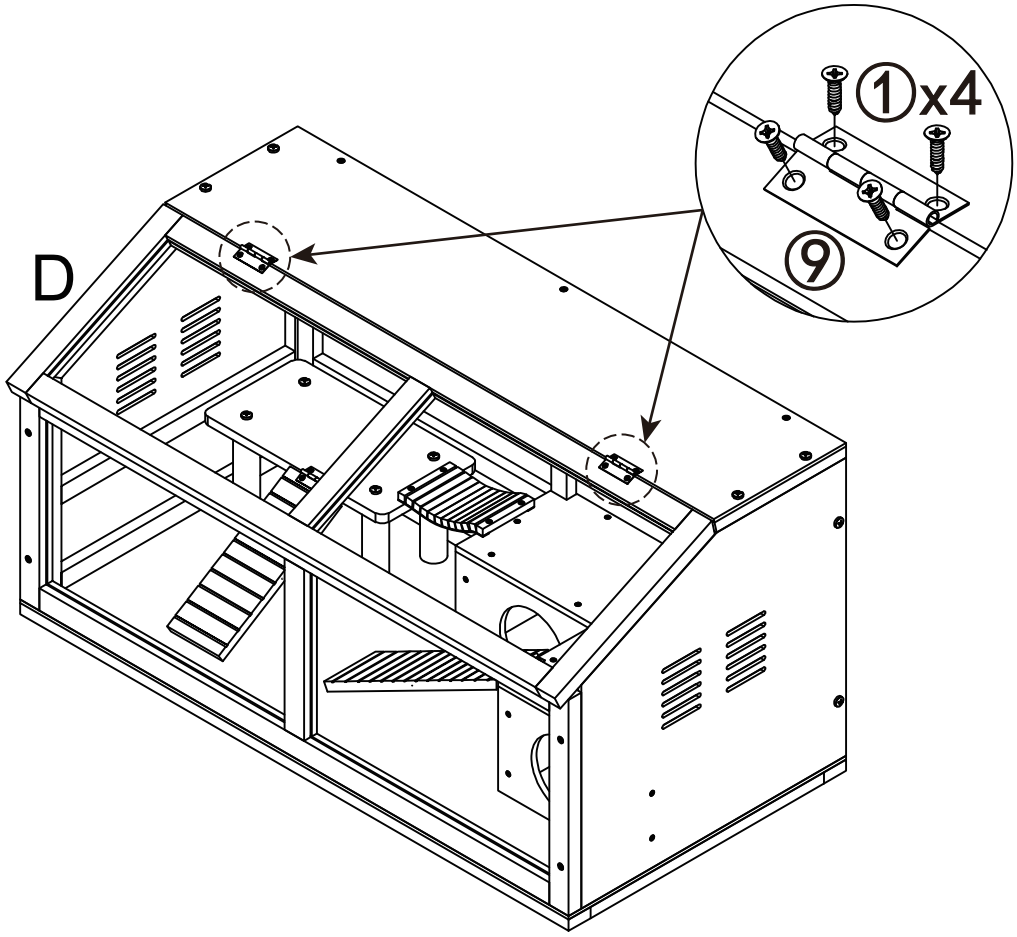

Done

② x1
M3.0*16

⑩ x1

⑪ x1

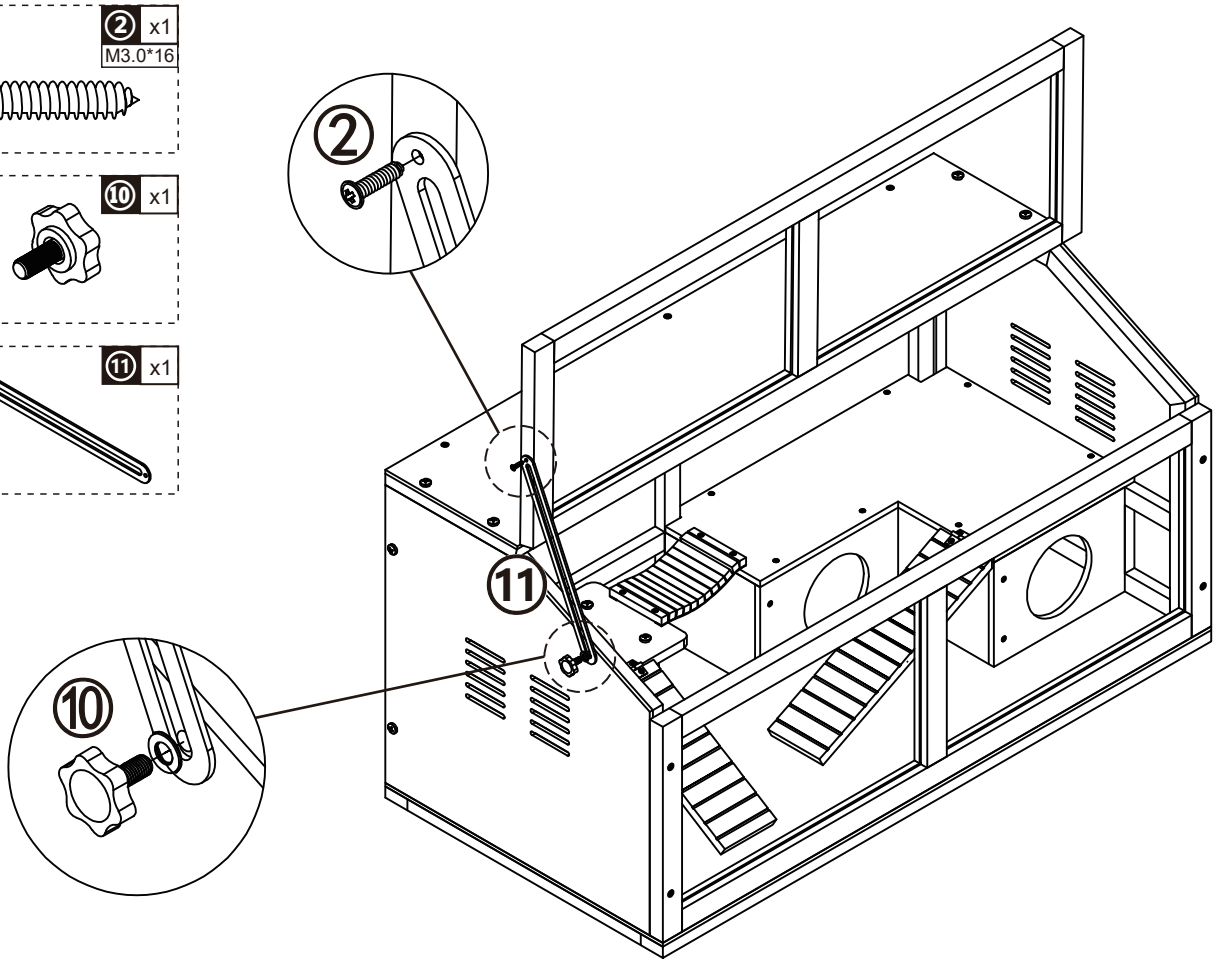

US

If you have any questions, please contact our customer care center, Our contact details are below:

001-877-644-9366

customerservice@aosom.com

Imported by Aosom LLC
27150 SW Kinsman Rd Wilsonville, OR 97070 USA
MADE IN CHINA

CA

If you have any questions, please contact our customer care center, Our contact details are below:

416-792-6088

customerservice@aosom.ca

Imported by Aosom Canada Inc.
7270 Woodbine Avenue, Unit 307, Markham,
Ontario Canada L3R 4B9
MADE IN CHINA

Si vous avez la moindre question, veuillez contacter notre centre d'assistance à la clientèle,Nos coordonnées sont les suivantes:

416-792-6088

customerservice@aosom.ca

Importé par Aosom Canada Inc.
7270 Woodbine Avenue, unité 307,
Markham, Ontario Canada L3R 4B9
FABRIQUÉ EN CHINE

UK

If you have any questions, please contact our customer care center, Our contact details are below:

0044-800-240-4004

enquiries@mhstar.co.uk

IMPORTER ADDRESS:
MH STAR UK LTD
Unit 27, Perivale Park,
Horsenden lane South
Perivale, UB6 7RH
MADE IN CHINA

DE

Wenn Sie Fragen haben, wenden Sie sich bitte an unser Kundendienstzentrum,Unsere Kontaktdaten stehen unten:

0049-0(40)-87408465

service@aosom.de

ADRESSE DES IMPORTEURE/Hersteller/REP:
MH Handel GmbH
Wendenstraße 309
D-20537 Hamburg
Germany
IN CHINA HERGESTELLT

IT

In caso di dubbio, si prega di contattare il nostro centro assistenza clienti,I nostri dettagli di contatto sono di seguito:

0039-0249471447

clienti@aosom.it

IMPORTATO DA/Produttore/REP:
AOSOM Italy srl
Centro Direzionale Milanofiori
Strada 1 Palazzo F1
20057 Assago (MI)
P.I.: 08567220960
FATTO IN CINA

ES

Si tiene alguna pregunta, comuníquese con nuestro Centro de Atención al Cliente,Nuestros datos de contacto son los siguientes:

0034-931294512

atencioncliente@aosom.es

IMPORTADOR/Fabricante/REP:
SPANISH AOSOM, S.L.
C/ROC GROS,Nº15.08550, ELS HOSTALETS DE BALENYÀ, SPAIN.
B66295775
HECHO EN CHINA

Se tiver alguma dúvida, por favor contacte o nosso Centro de Atendimento ao Cliente,Os nossos dados de contacto são os seguintes:

0034-931294512

info@aosom.pt.

IMPORTADOR/Fabricante/REP:
SPANISH AOSOM, S.L
C.ROC GROS N.15, 08550. ELS HOSTALETS DE BALENYÀ
FEITO NA CHINA

FR

Si vous avez la moindre question, veuillez contacter notre centre d'assistance à la clientèle,Nos coordonnées sont les suivantes:

0033-1-84166106

aosom@mhfrance.fr

Importé par/Fabricant/REP:
MH FRANCE
2 Rue Maurice Hartmann
92130 Issy Les Moulineaux
France
FABRIQUÉ EN CHINE

