PawHut

IN250800053V01_GL_

# D51-499V00

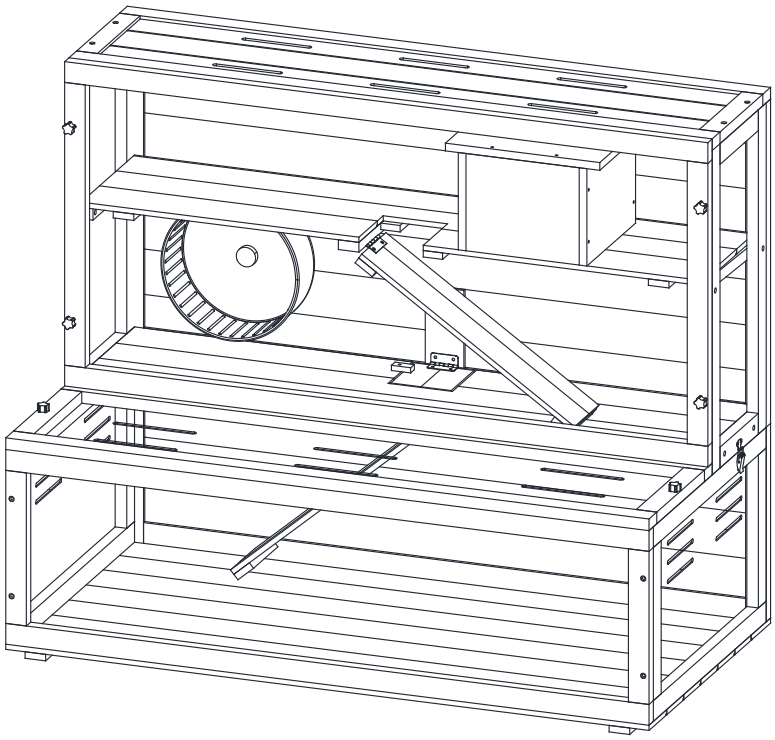

8
STEPS

1 HR

***EN*_IMPORTANT, RETAIN FOR FUTURE REFERENCE: READ CAREFULLY.**

***FR*_IMPORTANT:A LIRE ATTENTIVEMENT ET À CONSERVER POUR CONSULTATION ULTÉRIEURE.**

***ES*_IMPORTANTE, LEA Y GUARDE PARA FUTURAS REFERENCIAS.**

***PT*_IMPORTANTE, RETER PARA REFERÊNCIA FUTURA: LEIA ATENTAMENTE.**

***DE*_WICHTIG! SORGFÄLTIG LESEN UND FÜR SPÄTER NACHSCHLAGEN AUFBEWAHREN.**

***IT* _ IMPORTANTE! CONSERVARE IL PRESENTE MANUALE PER FUTURO RIFERIMENTO E LEGGERLO ATTENTAMENTE.**

① x 1



② x 1

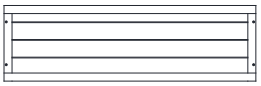

③ x 2

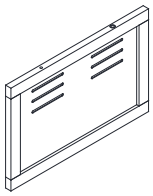

④ x 1



⑤ x 1



⑥ x 2



⑦ x 1

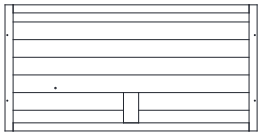

⑧ x 1

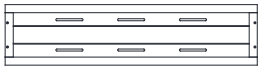

⑨ x 1

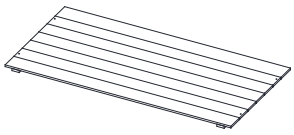

⑩ x 1

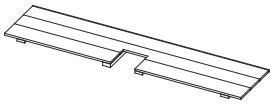

⑪ x 1

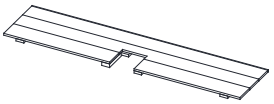

⑫ x 1

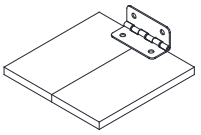

⑬ x 1

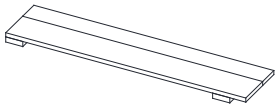

⑭ x 1

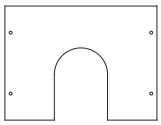

⑮ x 1



⑯ x 2



⑰ x 1

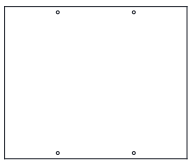

⑱ x 2

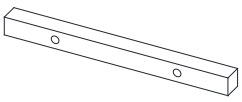

⑲ x 2

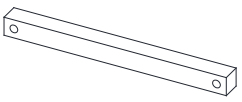

⑳ x 1

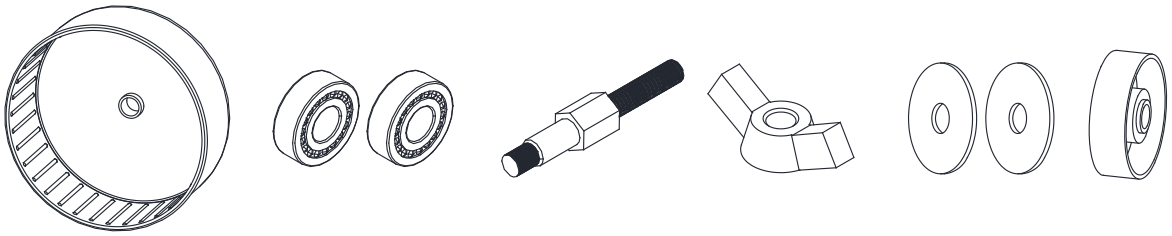

## HARDWARE

| | | | |
|---|---|---|---|
| A x17<br>M3.5x35<br>+1(spare)<br>  | B x 4<br>M3.5x30<br>+1(spare)<br>  | C x12<br>M3.0x25<br>+1(spare)<br>  | D x 9<br>M3.5x20<br>+1(spare)<br>  |
| E x22<br>M3.0x16<br>+1(spare)<br>  | F x 8<br>M6.0x45<br>+1(spare)<br>  | G x 6<br>M6.0x35<br>+1(spare)<br> 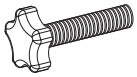 | H x12<br>Φ6 x 20<br>+1(spare)<br> 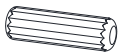 |
| J x 6<br> 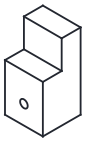 | K x 1<br>  | L x 4<br> 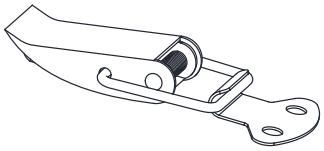 | |

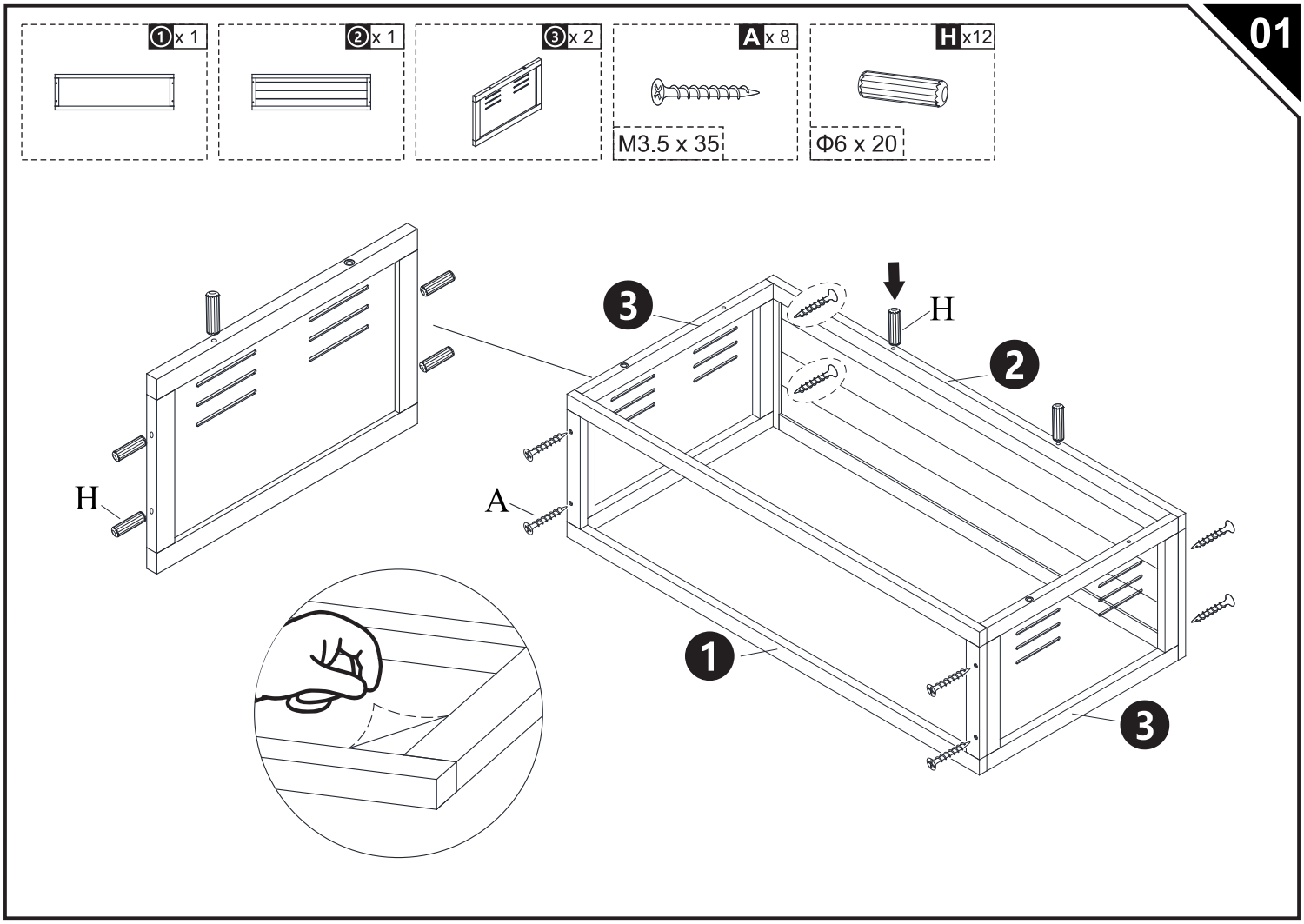
01
1 x 1
2 x 1
3 x 2
A x 8
M3.5 x 35
H x12
Φ6 x 20
H
A
H
3
2
1
3

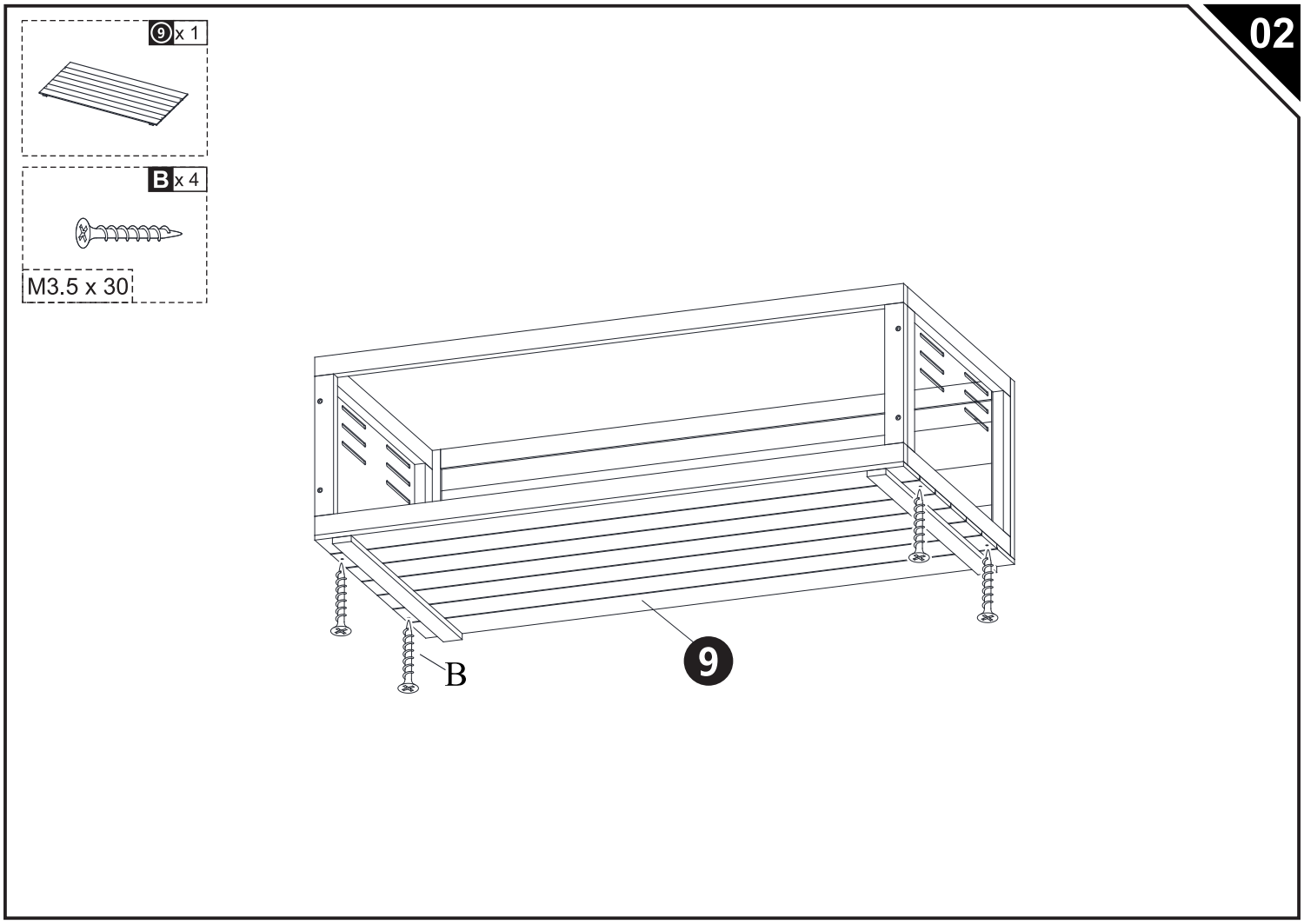
02
9 x 1
B x 4
M3.5 x 30
B
9

## 03

⑥ x 2



⑱ x 2

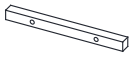

⑲ x 2



F x 8



M6.0 x 45

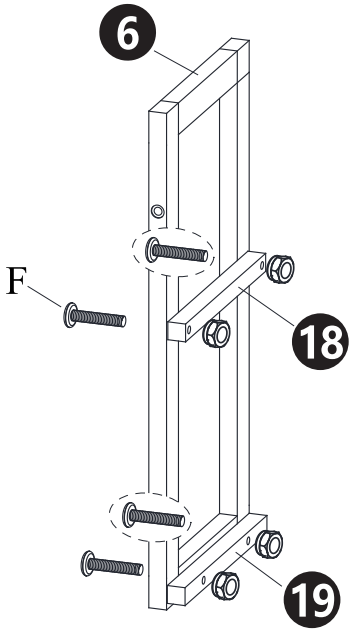


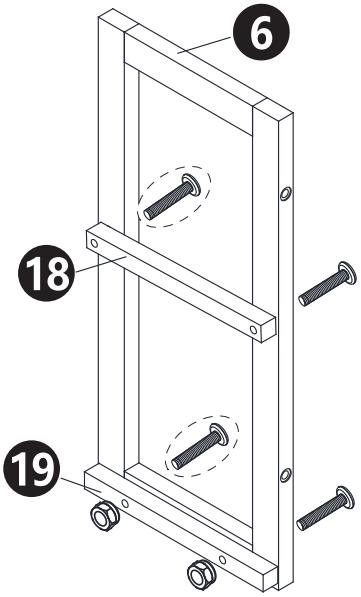


## 04

⑦ x 1

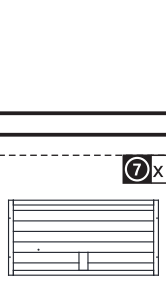

⑳ x 1



A x 4



M3.5 x 35

E x16



M3.0 x 16

L x 4

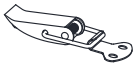

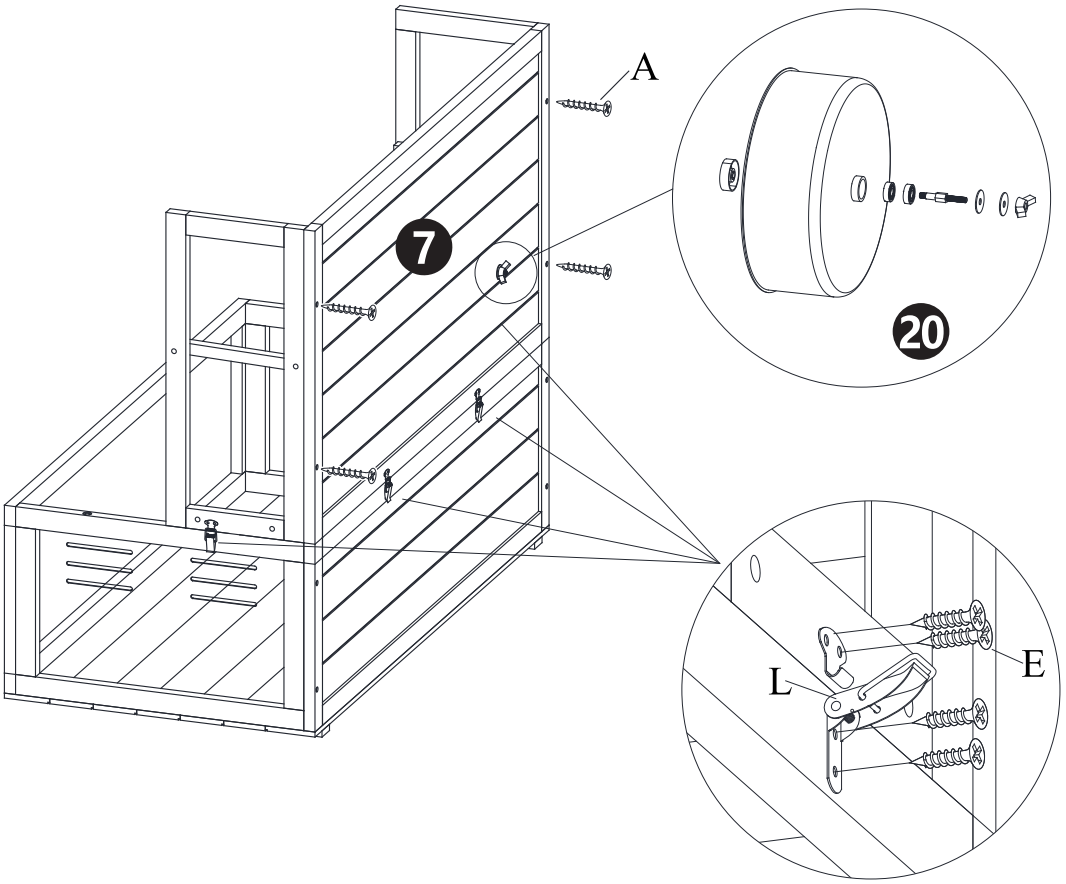

05

⑩ x 1



⑪ x 1



⑬ x 1



E x 4



M3.0 x 16

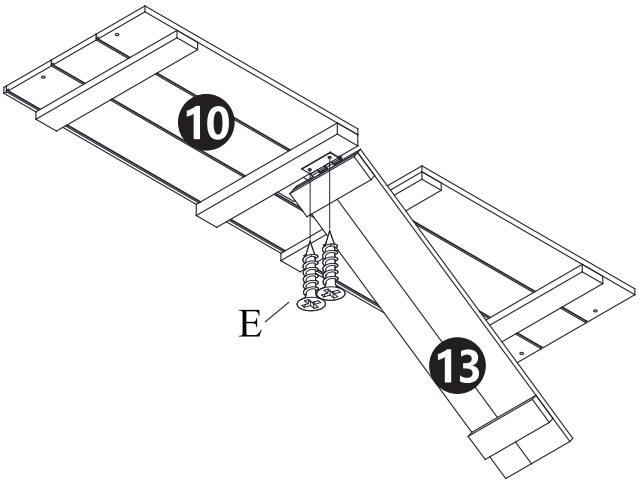


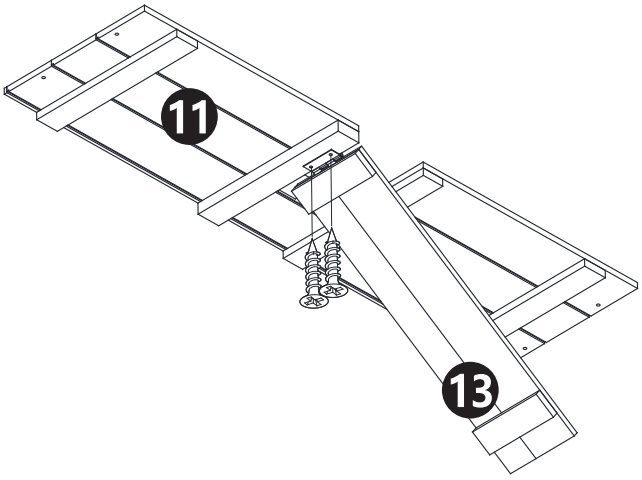


06

⑫ x 1

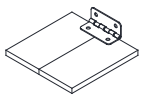

A x 1



M3.5 x 35

D x 9



M3.5 x 20

E x 2



M3.0 x 16

J x 1



K x 1



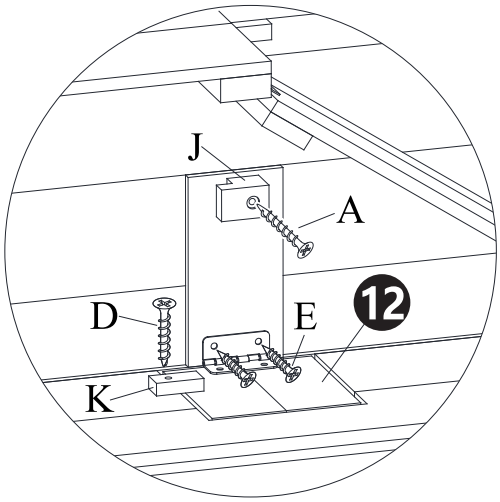


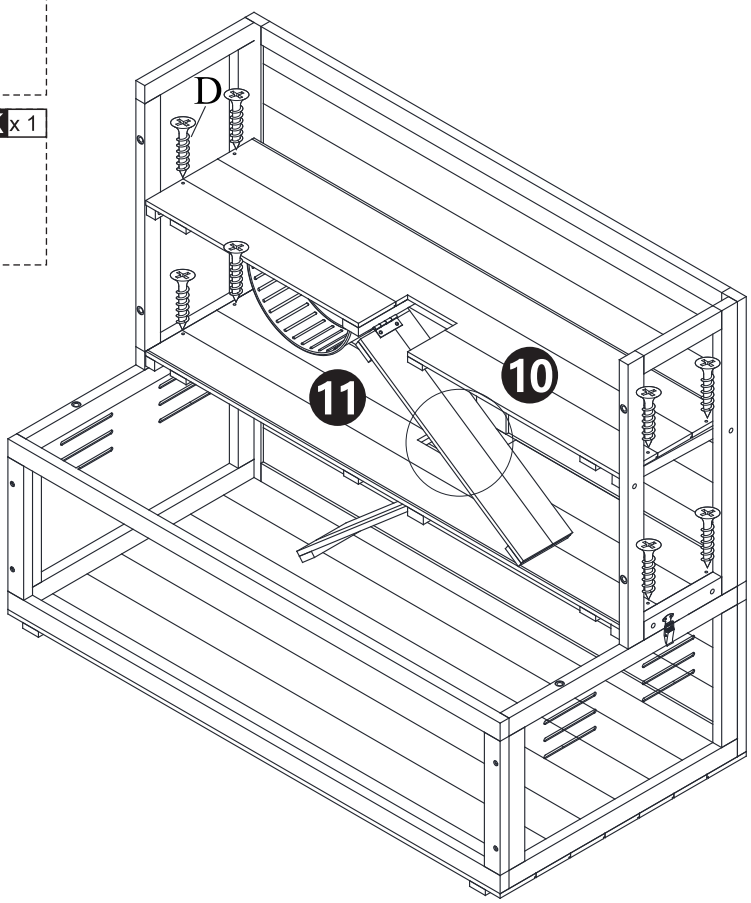

07

⑭ x 1



⑮ x 1



⑯ x 2



⑰ x 1



C x12



M3.0 x 25

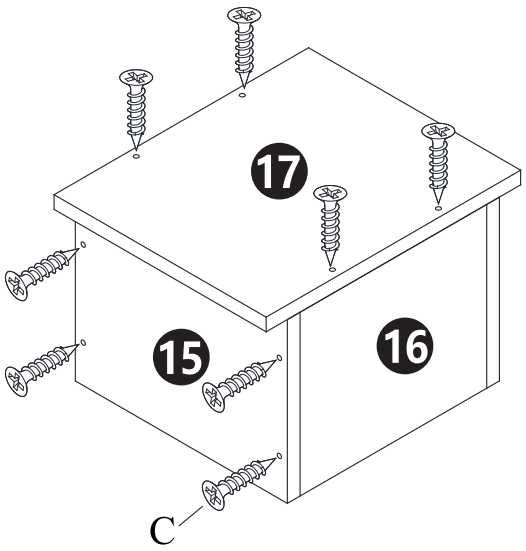


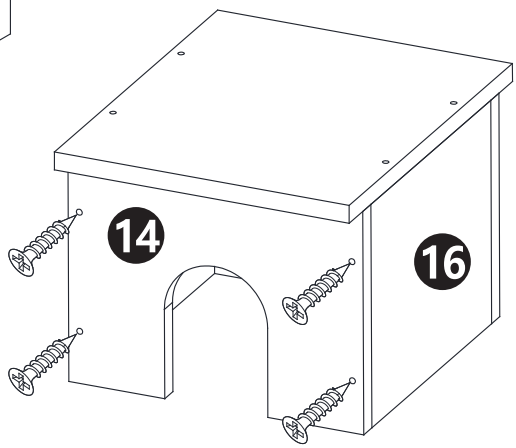


08

④ x 1



⑤ x 1



⑧ x 1

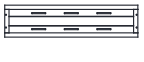

A x 4



M3.5 x 35

G x 6

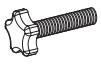

M6.0 x 35

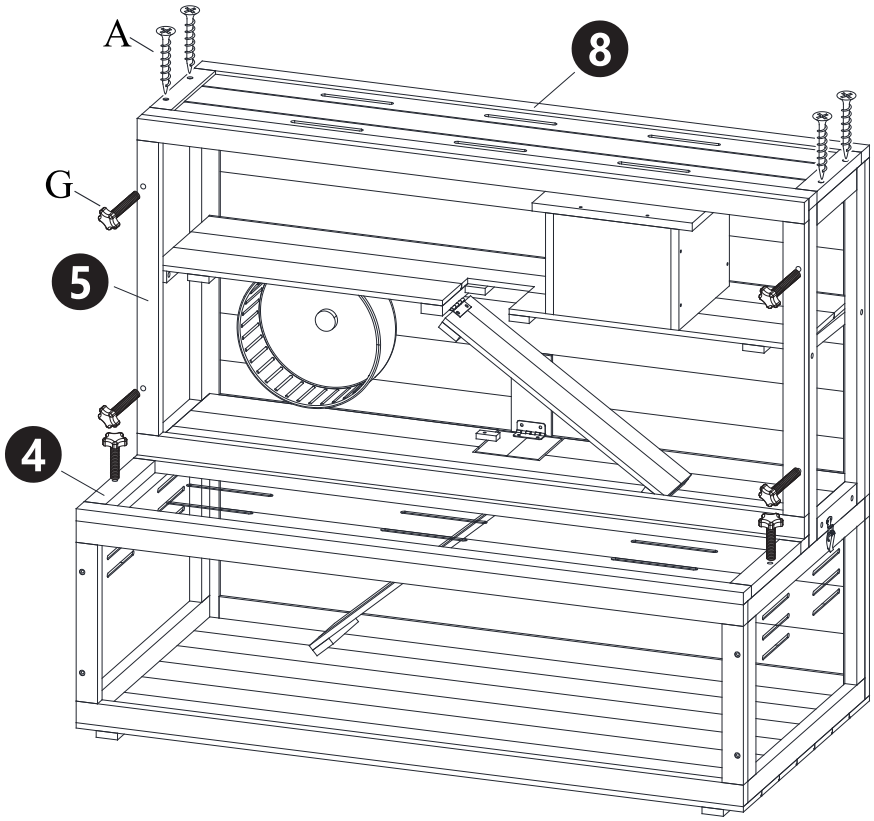


DONE

**US**

If you have any questions, please contact our customer care center, Our contact details are below:

001-877-644-9366

customerservice@aosom.com

Imported by Aosom LLC
7777 Center Ave. Suite 430
Huntington Beach, CA 92647-9998 USA

**CA**

If you have any questions, please contact our customer care center, Our contact details are below:

416-792-6088

customerservice@aosom.ca

Imported by Aosom Canada Inc.
7270 Woodbine Avenue, Unit 307, Markham,
Ontario Canada L3R 4B9
MADE IN CHINA

Si vous avez la moindre question, veuillez contacter notre centre d'assistance à la clientèle,Nos coordonnées sont les suivantes:

416-792-6088

customerservice@aosom.ca

Importé par Aosom Canada Inc.
7270 Woodbine Avenue, unité 307,
Markham, Ontario Canada L3R 4B9
FABRIQUÉ EN CHINE

**ES**

Si tiene alguna pregunta, comuníquese con nuestro Centro de Atención al Cliente,Nuestros datos de contacto son los siguientes:

0034-931294512

atencioncliente@aosom.es

IMPORTADOR/Fabricante/REP:
SPANISH AOSOM, S.L.
C/ROC GROS,Nº15.08550, ELS HOSTALETS DE BALENYÀ, SPAIN.
B66295775
HECHO EN CHINA

Se tiver alguma dúvida, por favor contacte o nosso Centro de Atendimento ao Cliente,Os nossos dados de contacto são os seguintes:

0034-931294512

info@aosom.pt.

IMPORTADOR/Fabricante/REP:
SPANISH AOSOM, S.L
C.ROC GROS N.15, 08550. ELS HOSTALETS DE BALENYÀ
FEITO NA CHINA

**IT**

In caso di dubbio, si prega di contattare il nostro centro assistenza clienti,I nostri dettagli di contatto sono di seguito:

0039-0249471447

clienti@aosom.it

IMPORTATO DA/Produttore/REP:
AOSOM Italy srl
Centro Direzionale Milanofiori
Strada 1 Palazzo F1
20057 Assago (MI)
P.I.: 08567220960
FATTO IN CINA

**UK**

If you have any questions, please contact our customer care center, Our contact details are below:

0044-800-240-4004

enquiries@mhstar.co.uk

IMPORTER ADDRESS:
MH STAR UK Ltd
1 Northampton Cross Logistics Park
Northampton Cross Road
Northampton
NN4 9FH
MADE IN CHINA

**DE**

Wenn Sie Fragen haben, wenden Sie sich bitte an unser Kundendienstzentrum,Unsere Kontaktdaten stehen unten:

0049-0(40)-87408465

service@aosom.de

ADRESSE DES IMPORTEURE/Hersteller/REP:
MH Handel GmbH
Wendenstraße 309
D-20537 Hamburg
Germany
IN CHINA HERGESTELLT

**FR**

Si vous avez la moindre question, veuillez contacter notre centre d'assistance à la clientèle,Nos coordonnées sont les suivantes:

0033-1-84166106

aosom@mhfrance.fr

Importé par/Fabricant/REP:
MH FRANCE
2 Rue Maurice Hartmann
92130 Issy Les Moulineaux
France
FABRIQUÉ EN CHINE

